PAVUS, a.s.
AUTORIZED BODY AO 216
NOTIFIED BODY 1391
EGOLF MEMBER

L 1026

Order number: 1 08 314
(Z210080283)

FIRE TEST LABORATORY VESELÍ NAD LUŽNICÍ
Test laboratory accredited by the Czech Institute for accreditation, o.p.s., registered under No. 1026

FIRE RESISTANCE TEST REPORT

No. Pr-09-2.022-En

Issued on 3rd March 2009

Covering the device:

Curtain walling

Glassed-in curtain wall - system ELEGANCE 52 FR with glazing Pilkington Pyrostop® 30-26 incorporating 6 mm toughened Glass

- External fire exposure -

Sponsor: **Sapa Building System s.r.o.**
Josefa Čapka 3235
272 01 Kladno
Czech Republic

Another test report owner:
Pilkington Deutschland AG
Haydnstrasse 19
D-45884 Gelsenkirchen

Test method:

ČSN EN 1364-3 » Fire resistance tests non-loadbearing elements – Part 3 : Curtain walling – Full configuration (complete assembly)«

Report consists of: 34 pages
(5 pages of text + 4 annexes)

Number of issues : 4
Issue number : 3

Without laboratory written approval the test-report may be copied exclusively as a whole.

Prosecká 412 / 74, 190 00 Praha 9 - Prosek, e-mail: mail@pavus.cz, http:// www.pavus.cz
Reg. No. 60193174, VAT No. CZ60193174. The Company is registered in the Commercial Register administered by the Municipal Court of Prague (section B, inset 2309)
Tel.: +420 286 019 587, Fax: +420 286 019 590

Test Laboratory Veselí nad Lužnicí
Čtvrť J. Hybeše 879, 391 81 Veselí nad Lužnicí, e-mail: veseli@pavus.cz
Tel.: +420 381 477 418, Fax: +420 381 477 419

1 INTRODUCTION

The fire resistance test of the curtain wall was executed by an order of *Sapa Building System s.r.o.* at the Fire test laboratory in Veselí nad Lužnicí.

The test was planed, executed and evaluated on the basis of following documents:

[1] ČSN EN 1364-3: 2007 Fire resistance tests for non-loadbearing elements - Part 3: Curtain walling – Full configuration (complete assembly) (The identical version of the European Standard EN 1364-3: 2006)

[2] ČSN EN 1363-1: 2000 Fire resistance tests - Part 1: General requirement (The identical version of the European Standard EN 1363-1: 1999)

[3] ČSN EN 1363-2: 2000 Fire resistance tests - Part 2: Alternative and additional procedures (The identical version of the European standard EN 1363-2)

[4] Technical documentation of specimens (delivered by the sponsor)

For the purpose of this report the definitions stated in [1], [2], [3] mentioned above, together with following abbreviations are in force:

TC	thermocouple
TM	thermometer (sheathed TC)
PTM	plate thermometer fit with a TM ∅ 1 mm
EF	fire exposed face of the specimen
UF	unexposed face of the specimen
DV	datum values by [2] 10.3.
RTC	roving thermocouple
GP	glass pane / glass panes

2 SUBJECT OF TEST

Subject of test: the specimen of **the glassed-in curtain wall - ELEGANCE 52 FR with glazing Pilkington Pyrostop® 30-26 incorporating 6 mm toughened Glass** was exposed of the external face and was supported by the supporting frame and located adjacent to the furnace. Specified dimension of specimen: 3624 mm (wide) × 3956 mm (high); the exposed width and height were 3000 mm.

Frame: The framework of tested specimen was made of aluminium mullions 52 × 85 mm (P/N 52M52) and aluminium transoms 52 × 90.5 mm (P/N 52T62). Transoms were connected to mullions by steel screws (2 screws P/N SCA516, ∅ 4.8 × 16 mm) at the front and aluminium brackets P/N TS9Z01 or P/N TS3Z56 inside the sections. Transoms and mullions were filled with cooling inserts P/N CO5008 - aluminium profile with gypsum reinforced by cellulose fibres. Cooling inserts were screwed to the transoms and mullions by paired steel screws P/N 82K216, ∅ 3.5 × 16 mm (locations according to drawing TE52-15.13).

Panes: Framework was glazed by 12 double glass units with following composition: tempered glass 6 mm (on exposed external side) - 12 mm argon filled gap - fire resistant glass Pilkington Pyrostop 30-26 (18 mm; on unexposed internal side). Glass sheets had following sizes (W×H): 478 × 680 mm (2 pcs.), 1209 × 680 mm (4 pcs.), 588 × 680 mm (2 pcs.), 478 × 2328 mm (1 pc), 1209 × 2328 mm (2 pcs.) and 588 × 2328 mm (1 pc).

Glass units were fixed to the frame by: aluminium pressure plates P/N 52P03; steel clips P/N CO5007 (c/c = 200 mm) with steel screws ∅ 5,5 × 60 mm (on mullions) and ∅ 5,5 × 55 mm (on transoms); external EPDM gaskets P/N 52R027; internal EPDM gaskets and 52R222 (on mullions) and 52R220 (on transoms).

Pressure plates were covered by aluminium covers P/N 52A13 (on mullions) and P/N 52A10 (on transoms). Around the glass edges intumenscent strip P/N BT0006 (Intumex LFCSK 2 × 30 mm) was

used. Glass sheets were supported on transoms by aluminium brackets 52C008 and beech wood blocks 3 × 35 × 80 mm.

Fixing to the support construction: Each mullion was fixed to the supporting frame at 3 points by steel bracket (according to drawing TE52-15.12), steel screw M8 × 80 mm (with M8 nut and washers) and 2 steel screws M8 × 150 mm (with M8 nuts and washers). Top fixations were used only to stabilize top parts of mullions (above the furnace). Just under the middle fixation point, in each mullion, the expansion gap 10 mm was created so the dead load was taken at the bottom of mullions ('standing mullions'). Expansion gap was sealed by the fire resistant silicone mastic.

The grooves at the specimen perimeter were filled with the distance elements: PVC distance profile P/N KU2014 (36 × 38 mm) on the "free" edges and 3 × 12,5 mm gypsum boards on edges towards the furnace.

Detailed documentation added by sponsor is in Annex 3.

The specimen was assembled according to [1] Article 7 and Annex 2 of this report. The sponsor was a manufacturer of the tested specimen.

The panes for the specimen were delivered to the test laboratory on 20th November 2008, the frame construction was delivered on 1st December 2008 and the specimen was set together on the supporting frame by sponsor in this same day without any failures, in compliance with the delivered documentation.

3 TEST PROCEDURES

3.1 General information

The fire resistance test was performed according to [1] on 4th December 2008 in a vertical wall test furnace with internal dimensions of 3000 mm (width) × 3000 mm (height) × 1900 mm (depth - inclusive of the associated construction, width 600 mm).

The specimen was restrained front of the furnace on the supporting construction. The gap between the furnace and the specimen was packed with a mineral fibre.

The test equipment and measurement equipment used for the test are stated in Annex 1.

The representatives of the sponsor witnessed the test procedure.

3.2 Control of the test equipment

The fire resistance of the specimen was determined under internal exposure conditions. The standard (internal fire exposure) curve given in [1] was used.

An oil burner set heated the test furnace. Temperature values inside the furnace were measured by PTMs and recorded at one-minute regular intervals. Furnace temperatures were controlled so as to meet - within a tolerance ranges by [1] clause 5.1.2 - the relation [1] clause 5.1.1:

$$T = 345 \log (8t + 1) + 20$$

in which T(°C) is the furnace temperature set by standard in time t (min) since the test beginning.

The standard curve was used at the request of the sponsor.

Overpressure in test furnace was measured and controlled, so that values respond of conditions [2] clause 5.2.

3.3 Measurements on the specimen

Temperature values on unexposed surfaces of specimens were measured with TCs in accordance with [2] clause 4.5.1.2 and recorded at one minute regular intervals. Measure junctions of TC were fixed in accordance with [1] clause 9.1.3.3.

One RTC was available to measure the unexposed surface temperature during the test at positions where higher temperatures are suspended (see [2] clause 4.5.1.3.

The horizontal deflection of the test specimen outspread to a working plane created with a rotating laser beam was measured by a steel rule in accordance [1] clause 9.3 and [2] clause 9.3.

Tests starting conditions correspond to the standard values in accordance with [2] clause 10.3.

3.4 Ambient temperature

The ambient temperature was measured by measurement equipment in accordance with [2] clause 5.6.

3.5 Conditioning

The specimens were stored in an ambient atmosphere of (50 ±5) % relative humidity at (23 ±5) °C of the handover date to the test fulfilment.

4 TEST OBSERVATIONS

Time (mins):	Observations:
4	GP 2 and 3 are fissured on EF (toughened glass)
5	GP 2 and 3 - toughened glasses on EF fell out
	GP 6 and 7 - toughened glasses on EF cracked out and fell out subsequently
7	GP 4 and 8 - toughened glasses on EF cracked out and fell out subsequently
	GP 3, 6 and 7 - 1st interlayer of the fire resistant glass begun to react (see photo in Annex 4)
8	GP 2 - 1st interlayer of the fire resistant glass begun to react
9	GP 4 and 8 - 1st interlayer of the fire resistant glass begun to react
	GP 2 - 1st glass layer fell out
10	GP 3, 4, 6 and 7 - surface on EF has turned dark
12	UF - there is a small amount of smoke issuing from mullions on upper and lower ends
	GP 2 and 8 - surface on EF has turned dark
	all GP - are impervious to light
15	all GP - another interlayer of the fire resistant glass begun to react
27	EF - flames were going of the profiles, aluminum begun to melt
28	UF - small pieces of glass are flying off
33	UF - there is a small amount of smoke issuing from joints of the frame and the panes
50	UF - smoke is issuing from whole surface of the specimen
59	UF - light of the furnace is going through left lower part of GP 3
62	the test is discontinued at the request of the sponsor

The Panes and TCs position is described in Annex 2.

Temperatures in the test furnace made in test courses met demands of [2]. Time dependence of measured variables is recorded in Annex 2.

5 EVALUATION OF TEST

5.1 Performance criteria

- **Integrity** (by [2] clause 11.2). This criterion is the period during which the test element maintains its separating function without the following resulting:
  a) ignition of the cotton pad applied in accordance with [2] clause 10.4.5.2; or
  b) the penetration of a gap gauge as specified in [2] clause 10.4.5.3; or
  c) sustained flaming.
- **Insulation** (by [2] clause. 11.3). As this criterion is considered the time period, during which the element maintains its separating function, provided the unexposed face temperatures have not reached values, causing the following:
  a) Increase the average temperature above the initial average temperature on the unexposed surface by more than 140 °C; or
  b) Increase at any location above the initial average temperature on the unexposed surface by more than 180 °C.
- **Radiation** (by [3] clause 8). The time for the measured radiation to exceed the value of 5, 10, 15, 20 a 25 kW.m^{-2} shall be reported. There is no requirement to measure the radiation from a surface with a temperature below 300°C.

5.2 Expression of test results

Integrity	- cotton pad	**61 minutes, no failure**
	- gap gauges	**61 minutes, no failure**
	- sustained flaming	**61 minutes, no failure**
Insulation	- average temperature	**45 minutes**
	- maximum temperature	**46 minutes**
Radiation[1)]	- 5 kW.m^{-2}	**60 minutes**
	- 10 kW.m^{-2}	**61 minutes, no failure**

[1)] Examination of the radiation was made from the average temperature for whole exposed part of the specimen with the emissivity 1,0 (it is on safety behalf). Calculation is enclosed in Annex 2.

The test results relate only to the behaviour of the test specimens during the conditions of the tests.

This report details the method of construction, the test conditions and the results obtained when the specific element of construction described herein was tested following the procedure outlined in EN 1363-1, 1363-2 and EN 1364-3. Any significant deviation with respect to size, constructional details, loads, stresses, edge or end conditions in the relevant test method is not covered by this report.

The test report and enclosures sheets
are valid with a print of the embossed stamp only.

Požární zkušebna Veselí nad Lužnicí, AKREDITOVANÁ ZKUŠEBNÍ LABORATOŘ č. 1026, PAVUS, a. s.

Worked out by: Radek Hruška, Technical Officer

Approved by: Mirko Louma, Assistant Manager of the Test Laboratory

ANNEX 1: TEST AND MEASURING EQUIPMENT, MEASUREMENT UNCERTAINTY

Test equipment:	Equipment Registration No:
Vertical wall furnace PO 1 (+equipment for regulating the temperature and pressure in the furnace)	2.002
Pressure probe in the furnace	2.006
Test supporting frame	2.040
Rotating laser – setting of a working plane	2.010
Gap gauge, diameter 6 mm	2.011
Gap gauge, diameter 25 mm	2.012
Frame for cotton pad	2.013

Measuring equipment:	Metrological Registration No:
Differential manometer AMR DPS	3 09 10
Logger unit Almemo 5990-2	3 10 34
PTM - furnace temperatures (TM K ∅ 1 mm)	3 10 08
TC (K) - UF temperatures	3 10 40
TM K ∅ 3 mm - ambient temperature	3 10 37
RTC + THERM 2260-2	3 10 06
Tape measure	3 01 05
Stopwatch	3 05 01
Thermo-hygro-graph THZ1int	3 13 05
Slide caliper	3 01 07

The metrological relationships of the device are defined in the metrological registration card of the device; this card is expressly identified by the metrological registration number of the device.

Because of the nature of fire resistance testing and the consequent difficulty in quantifying the uncertainty of measurement of fire resistance, it is not possible to provide a stated degree of accuracy of the result.

Measured quantity			**Measurement uncertainty**
Term	Denotation	Unit	
Time since test start	t	*(min)*	$3{,}4\ 10^{-2}$ *min, for* $t \leq 240$ *min*
Integrity failure time		*(min)*	$< 0{,}5$ *min*
Temperature: TM, type K + thermocouple compensation cable + Almemo 5990-2	T	*(°C)*	$\sqrt{(6{,}40.10^{-6}.T^2 + 1{,}57.10^{-1}\,°C^2)}$, for $40°C \leq T < 375°C$ $\sqrt{(8{,}04.10^{-5}.T^2 + 7{,}84\,°C^2)}$, pro $375°C \leq T \leq 1000°C$
Pressure difference in furnace compared with ambient	p	*(Pa)*	$\sqrt{(5.3.10^{-4}.p^2+1{,}1.10^{-5}Pa^2)}$
Deflection		*(mm)*	*1,8 mm*

The reported expanded uncertainties of measurement are stated as the standard uncertainties of measurement multiplied by the coverage factor $k = 2$, which for a normal distribution corresponds to a coverage probability of approximately 95%. The standard uncertainty of measurement has been determined in accordance with ALE Publication EA-16/02 (EAL R2) and GUM.

ANNEX 2: MEASURING

FURNACE TEMPERATURE AND PRESSURE, AMBIENT TEMPERATURE (T0)

Time t	Furnace temperatures (°C)									deviation d_e		T0	Pressure in 2,25 m		
(min)	T	1	2	3	4	5	6	7	T_s	permitted	actual	(°C)	permitted	actual	deviation
DV		12	12	12	12	12	12	13	12			11		(Pa)	
0	20	27	21	34	21	21	34	27	26			12		28,6	-
5	576	553	517	563	570	512	573	543	547	-	-4,0	12		9,0	-
10	678	612	697	649	633	600	668	655	645	±15	-1,9	12	9,0 ±5	21,5	12,5
15	739	726		748	764	738	768	748	749	±12,5	-0,4	12	9,0 ±5	14,0	5,0
20	781	783		805	813	794	818	806	803	±10	0,1	12	11,0 ±3	11,9	0,9
25	815	817		833	841	824	845	824	830	±7,5	0,2	13	11,0 ±3	10,9	-0,1
30	842	829		843	853	838	856	839	843	±5	0,3	13	11,0 ±3	9,9	-1,1
35	865	859		871	882	864	882	868	871	±4,6	0,4	13	11,0 ±3	11,4	0,4
40	885	856		866	881	867	880	868	870	±4,2	0,2	13	11,0 ±3	10,9	-0,1
45	902	890		901		895	911	896	898	±3,8	0,1	13	11,0 ±3	11,5	0,5
50	918	912		928		913	932	919	921	±3,3	0,1	14	11,0 ±3	9,5	-1,5
55	932	926		939		925	947	928	933	±2,9	0,1	14	11,0 ±3	11,8	0,8
60	945	946		960		940	968	948	952	±2,5	0,2	14	11,0 ±3	9,6	-1,4
61	948	946		962		942	970	949	954	±2,5	0,2	14	11,0 ±3	10,7	-0,3

Temperatures and pressure were scaned and treated every minute but the test process is displayed in the 5 min. interval.

XX PTM joint number in accordance with the laboratory data logger

TC is functionless

T (°C) = the furnace average temperature determined by [3] clause 5.2: $T=660\,[1 - 0{,}687\, e^{-0{,}32\, t} - 0{,}313\, e^{-3{,}8\, t}]+20$

t (min) = elapsed time from the beginning of the test

T_s (°C) = actual temperature in the furnace by [2] clause 5.1.2

d_e (%) = percentage of deviation in the area of the curve of average temperature in the furnace from the area of the standard

- permissible by [2] clause 5.1.2,
- actual by [2] clause 5.1.2: $d_e = ((A - A_s)/A_s) * 100$, where

  A = area under the actual temperature curve in the furnace

  A_s = area under the standard temperature curve

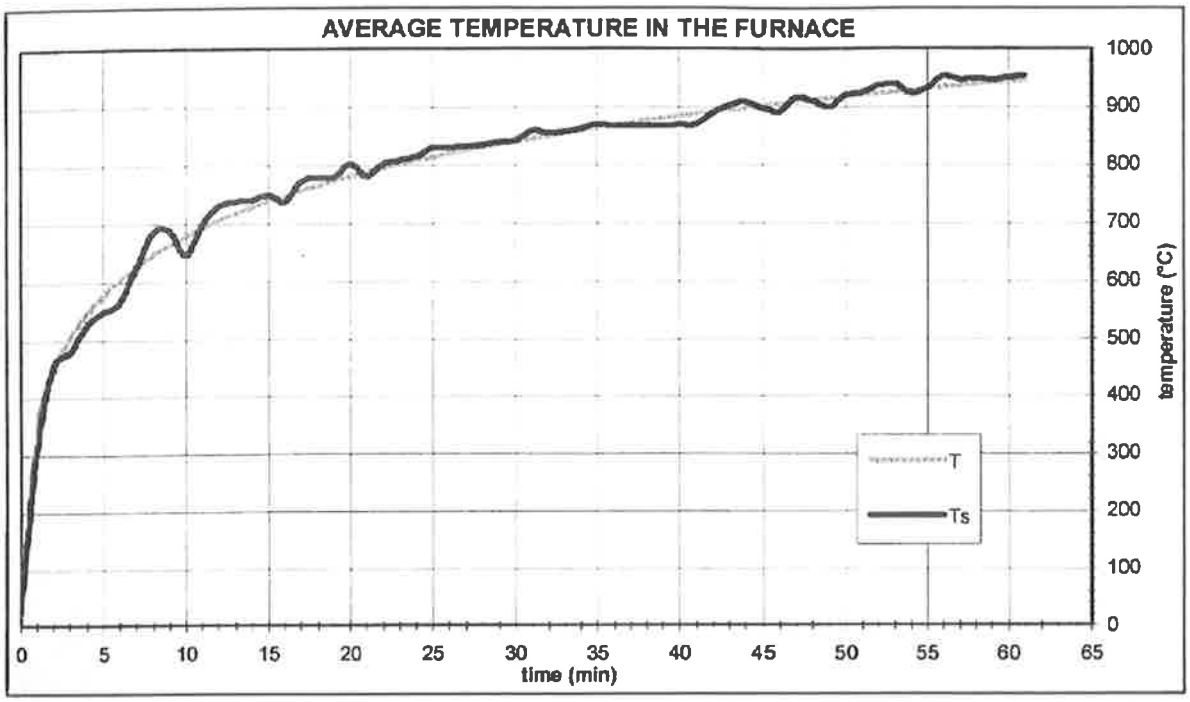
AVERAGE TEMPERATURE IN THE FURNACE
temperature (°C)
time (min)
T
Ts

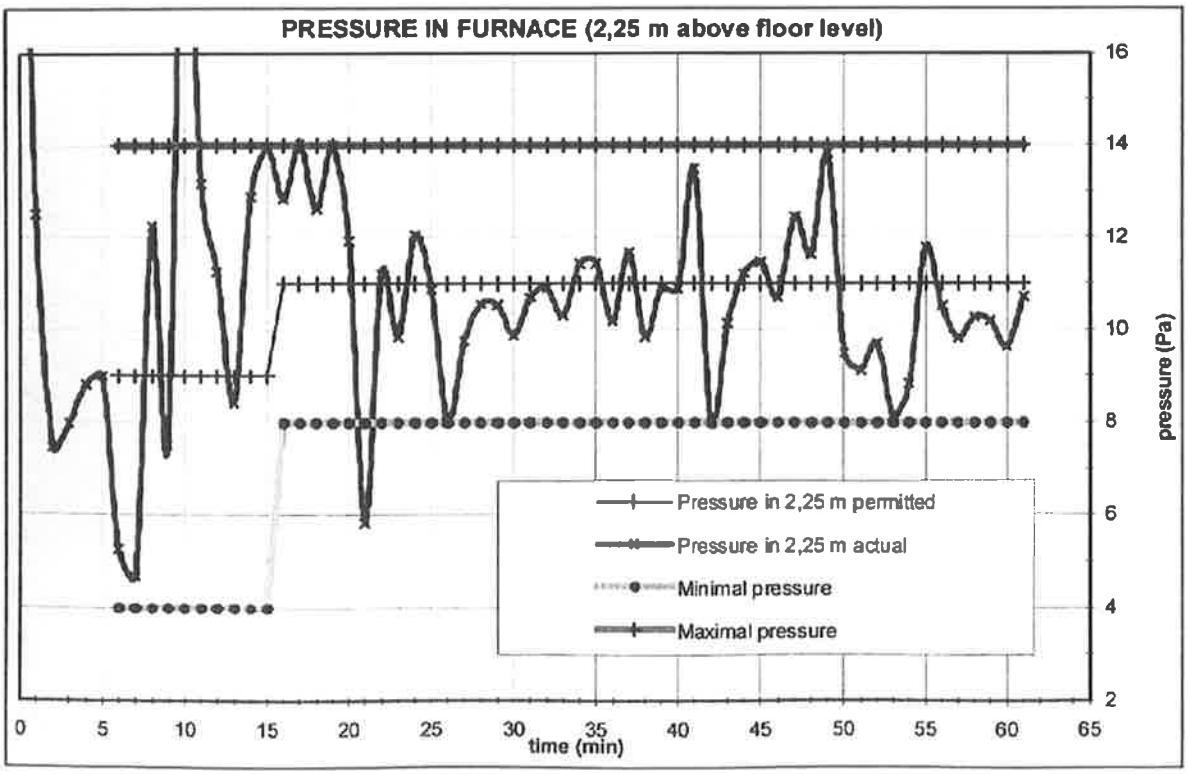
PRESSURE IN FURNACE (2,25 m above floor level)
pressure (Pa)
time (min)
Pressure in 2,25 m permitted
Pressure in 2,25 m actual
Minimal pressure
Maximal pressure

GENERAL VIEW OF TEST SPECIMEN, UNEXPOSED FACE THERMOCOUPLES AND POSITIONS OF DEFLECTION

Photo of the specimen in minute 15 of the fire test

Legend:

● 10 ÷ 14	- TC for T_{avrg} and T_{max}
● 15 ÷ 26	- TC for T_{max}
I, II, III and IV	- positions of deflection measurements
01 ÷ 12	- panels

SPECIMEN TEMPERATURE - TC for T_{avrg} and T_{max}

Time t (min)	10	11	12	13	14	T_{avrg}
DV	11	11	12	12	12	12
0	12	12	13	12	13	13
5	31	28	32	31	30	30
10	83	74	93	86	93	86
15	113	106	122	110	113	113
20	110	105	113	115	111	111
25	117	111	115	120	124	117
30	119	116	119	126	122	121
35	116	113	129	117	116	118
40	128	115	150	117	128	128
45	155	137	180	129	154	151
46	161	144	188	133	160	157
47	166	150	197	137	167	163
48	172	156	206	141	173	170
49	178	163	216	145	180	176
50	184	171	228	149	186	184
55	224	246	295	173	217	231
60	326	376	368	204	298	314
61	361	405	384	213	330	338

Temperatures were scaned and treated every minute but the test process is displayed in the 5 min. interval.

XX TC joint number in accordance with General view in Annex 2.

Time and temperature of insulation criterion failing.

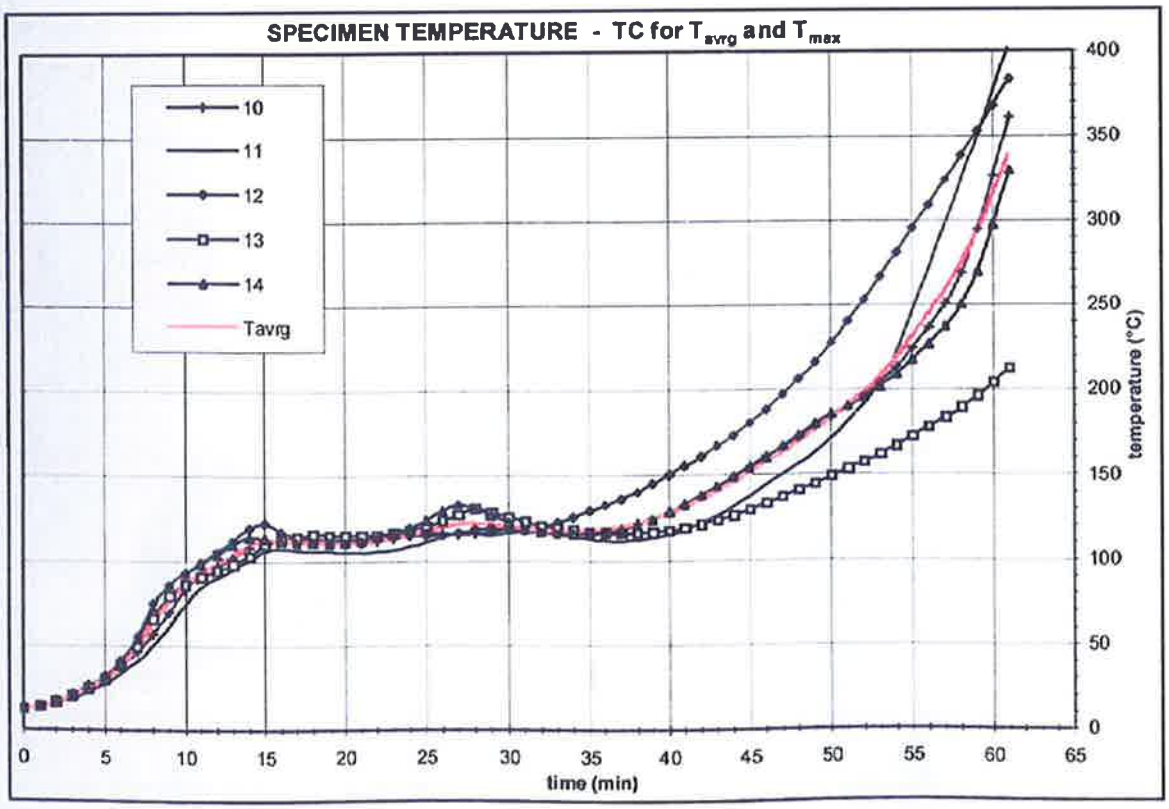

SPECIMEN TEMPERATURE - TC for T_{max} (T_{max} for all surface TC)

Time t (min)	A 15	B 16	B 17	C 18	C 19	D 20	E 21	F 22	F 23	G 24	G 25	G 26	T_{max}
DV	12	11	12	12	12	11	11	11	11	11	12	12	12
0	12	12	12	12	12	12	12	12	12	12	12	13	13
5	27	24	25	13	16	21	29	26	27	27	24	27	32
10	87	79	77	20	22	44	84	61	68	82	59	81	93
15	104	111	101	30	34	89	110	100	97	109	99	105	122
20	117	120	116	43	49	106	107	110	109	122	109	119	122
25	117	127	117	59	65	110	110	112	112	114	114	121	127
30	117	131	121	74	77	113	113	109	108	121	108	121	131
35	124	132	123	83	91	106	113	112	110	126	110	124	132
40	123	143	127	100	107	109	124	117	115	140	115	119	150
45	133	157	139	115	123	114	144	130	124	157	118	130	180
46	135	160	141	101	125	115	147	134	126	162	120	133	188
47	138	163	144	101	127	117	151	138	129	166	123	137	197
48	140	166	146	101	129	118	155	143	133	170	126	140	206
49	142	169	149	102	130	119	159	148	137	176	129	144	216
50	144	172	153	102	132	121	163	152	142	181	131	148	228
55	159	193	169	102	137	131	191	182	165	209	146	176	295
60	178	216	191	130	141	144	228	223	195	238	174	208	376
61	182	220	195	130	142	148	238	231	202	243	181	214	405

Temperatures were scaned and treated every minute but the test process is displayed in the 5 min. interval.

XX TC joint number in accordance with [1] clause 9.1.3.3.2.

XX TC joint number in accordance with General view in Annex 2.

Time and temperature of insulation criterion failing.

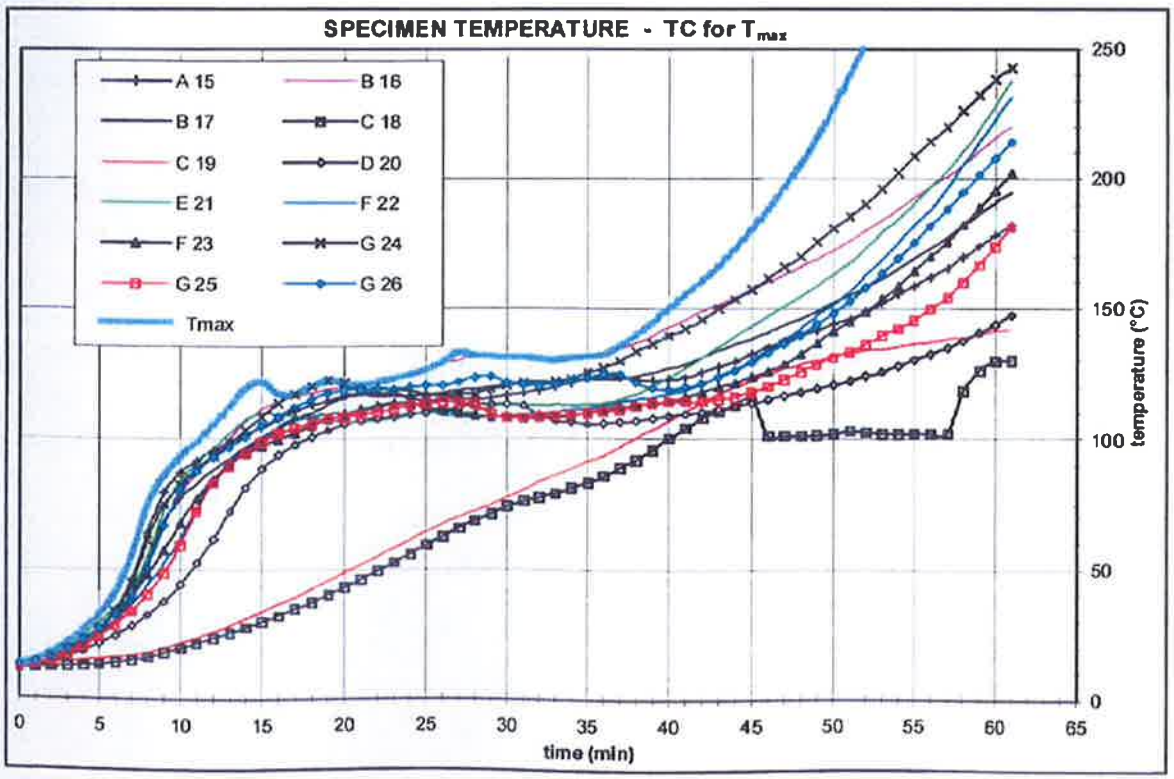

RADIATION

Fire exposed size of the specimen (a x b) 3 x 3 m

a_0 = a/2 = 1,500 m b_0 = b/2 = 1,500 m

Distance of the measurement from the unexposed face of the specimen according to EN 1363-2:

o = = 1 m

Calculation of the positional factor:

X(a) = a/o Y(b) = b/o

$\Phi(a,b) = 1/(2*\Phi)*((X(a)/\sqrt{(1+X(a)^2)})*atan(Y(b)/\sqrt{(1+X(a)^2)})+(Y(b)/\sqrt{(1+Y(b)2)})*atan(X(a)/\sqrt{(1+Y(b)2)}))$

Calculation of the thermal radiation intensity:

Stefan-Boltzmannova constant: Φ = 5,67E-08 $W*m^{-2}*K^{-4}$

Ppositional factor: $\Phi_s = 4*\Phi(a_0,b_0)$ = 0,735

Emissivity: ε_s = 1,00

Thermal radiation intensity: W(T) = $\varepsilon*\Phi*\Phi*(T+273,15)^4$ = 4,1686E-08 $*(T+273,15)^4$

For temperature: T = 338 °C

Thermal radiation intensity: **W = 5,8 kW/m²** < 15 kW/m²

Examination was made by simplified procedure with temperature in 61st minute of the test for whole exposed part of the specimen with the emissivity 1,0 (it is on safety behalf).

Limiting temperatures:

Radiation W =	5 kW/m²	T	= **315**	°C
	10 kW/m²	T	= **427**	°C
	15 kW/m²	T	= **501**	°C

DEFLECTION

time t (min)	Deflection point (mm)			
	I - left furnace edge	II - left central mullion	III - specimen centre - pane	IV - right furnace edge
0	0,0	0,0	0,0	0,0
11	1,0	7,0	8,0	3,0
16	2,0	4,0	2,0	4,0
21	3,0	5,0	3,0	4,0
29	4,0	8,0	9,0	4,0
36	3,0	9,0	11,0	5,0
40	2,0	10,0	13,0	5,0
50	0,0	16,0	23,0	6,0
55	0,0	15,0	27,0	8,0
61	-1,0	15,0	20,0	7,0

Positive values - deflection towards the furnace
Negative values - deflection outwards the furnace
Deflection point layout is in Annex 2.

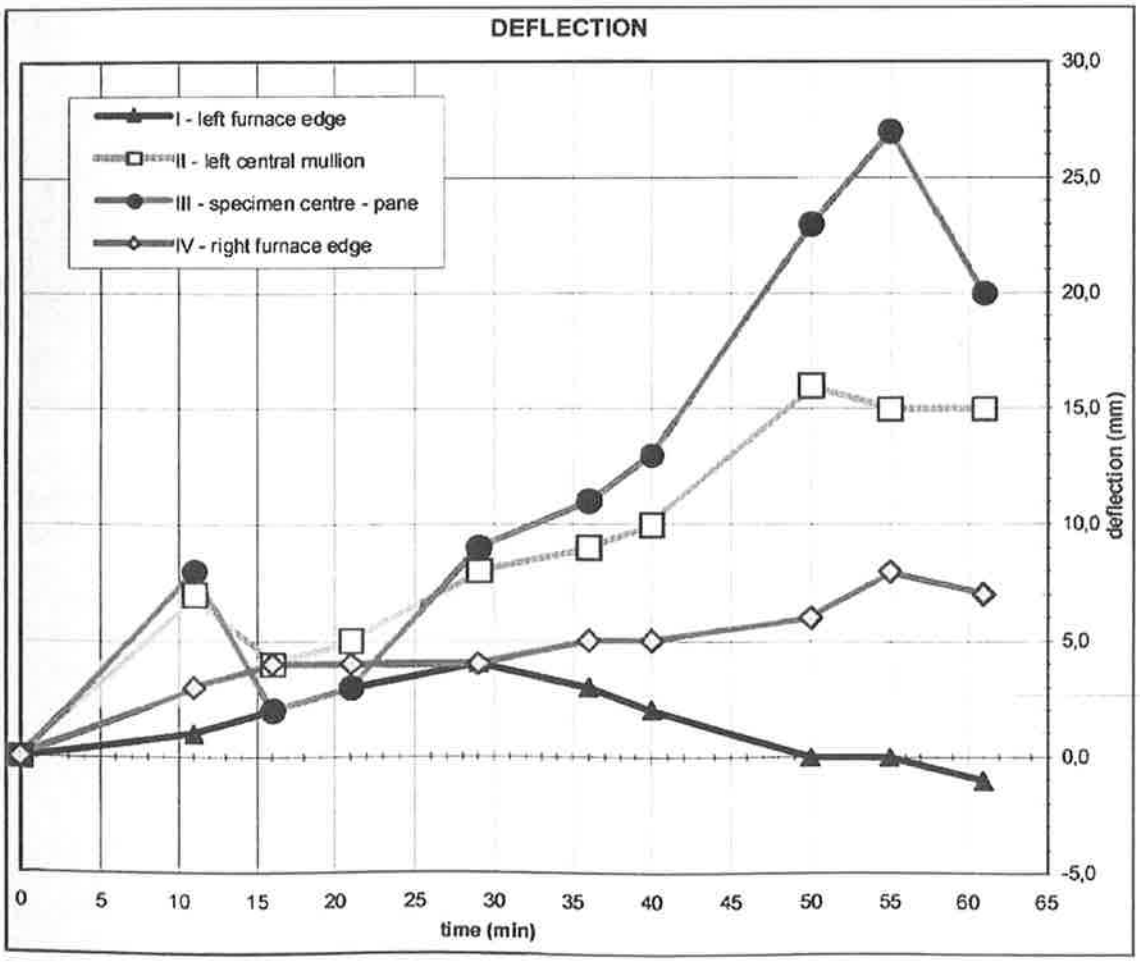

ANNEX 3: DOCUMENTATION

Technical documentation was delivered by the sponsor

ELEGANCE 52 FR test specimen description

The framework of tested specimen had total width 3624mm and height 3956mm, and was made of aluminium mullions 52×85mm (P/N 52M52) and aluminium transoms 52×90.5mm (P/N 52T62). Transoms were connected to mullions by steel screws (2 screws P/N SCA516, ∅4.8×16mm) at the front and aluminium brackets P/N TS9Z01 or P/N TS3Z56 inside the sections. Transoms and mullions were filled with cooling inserts P/N CO5008 – aluminium profile with gypsum reinforced by cellulose fibres. Cooling inserts were screwed to the transoms and mullions by paired steel screws P/N 82K216, ∅3.5×16mm (locations according to drawing TE52-15.13).

Framework was glazed by 12 double glass units with following composition: tempered glass 6 mm (on exposed external side) - 12mm argon filled gap – fire resistant glass Pilkington Pyrostop 30-26 (18 mm; on unexposed internal side). Glass sheets had following sizes (WxH): 478x680mm (2 pcs.), 1209x680mm (4 pcs.), 588x680mm (2 pcs.), 478x2328mm, 1209x2328mm (2 pcs.) and 588x2328mm. Glass units were fixed to the frame by:

- aluminium pressure plates P/N 52P03,
- steel clips P/N CO5007 (c/c=200mm) with steel screws ∅5,5×60mm (on mullions) and ∅5,5×55mm (on transoms),
- external EPDM gaskets P/N 52R027,
- internal EPDM gaskets and 52R222 (on mullions) and 52R220 (on transoms).

Pressure plates were covered by aluminium covers P/N 52A13 (on mullions) and P/N 52A10 (on transoms). Around the glass edges intumenscent strip P/N BT0006 (Intumex LFCSK 2×30mm) was used. Glass sheets were supported on transoms by aluminium brackets 52C008 and beach wood blocks 3×35×80mm.

Each mullion was fixed to the steel frame at 3 points by steel bracket (according to drawing TE52-15.12), steel screw M8×80mm (with M8 nut and washers) and 2 steel screws M8×150mm (with M8 nuts and washers). Top fixations were used only to stabilized top parts of mullions (above the furnace). Just under the middle fixation point, in each mullion, the expansion gap 10mm was created so the dead load was taken at the bottom of mullions ('standing mullions'). Expansion gap was sealed by the fire resistant silicone mastic.

The grooves at the specimen perimeter were filled with the distance elements:

- PVC distance profile P/N KU2014 (36x38mm) on the "free" edges,
- 3x12.5mm gypsum boards on edges towards the furnace.

Mineral wool was used to seal the gap between the furnace perimeter and the aluminium covers on the specimen.

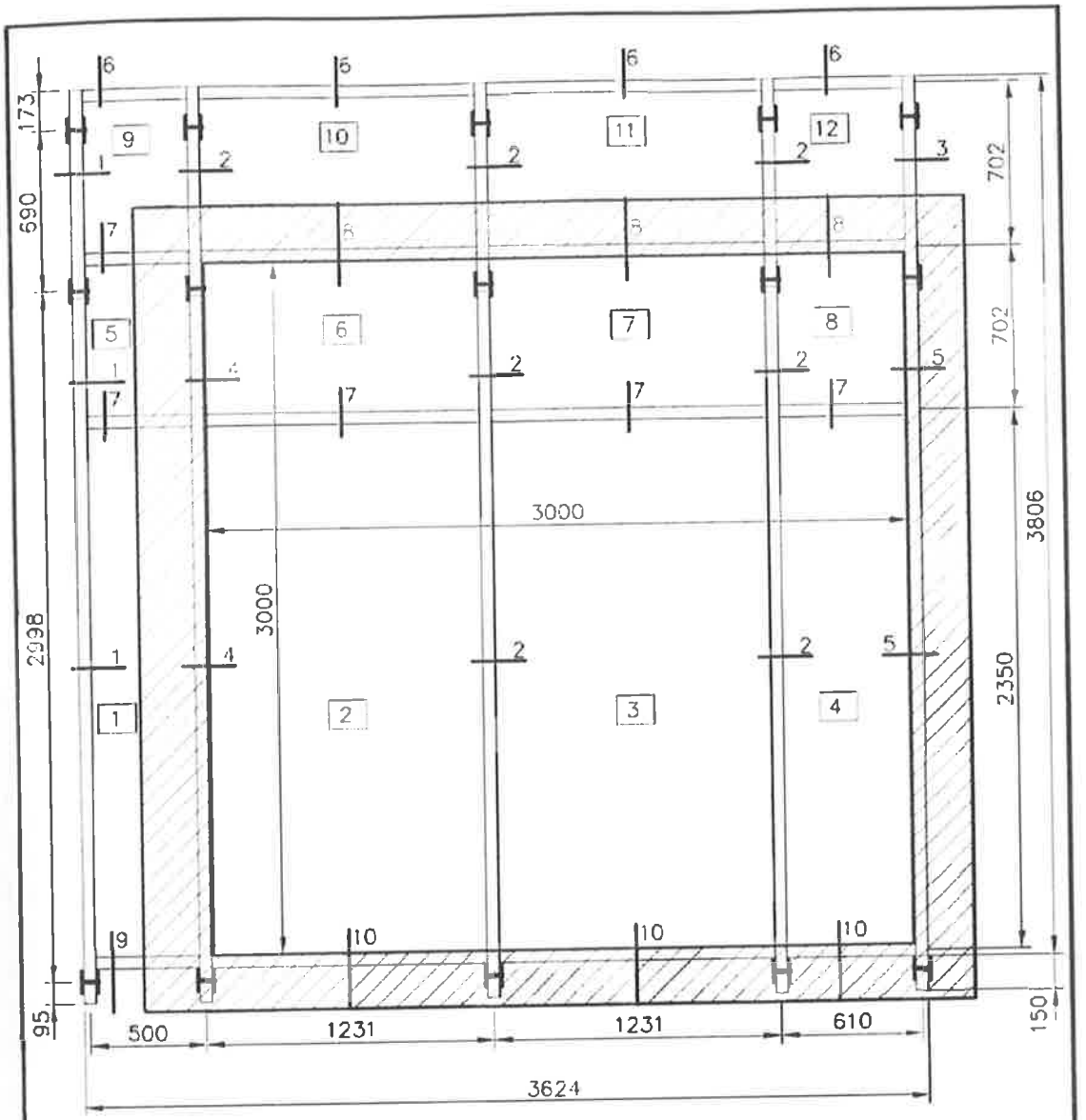

Double glazing:
Tempered glass 6mm–12 Argon–Pyrostop 30–26 (18mm)

sapa	Elegance 52 FR Test with specimen exposed from the outside. View from unexposed side.	ELEGANCE 52 FR		
		1:25	03-12-08	TE52-15.01

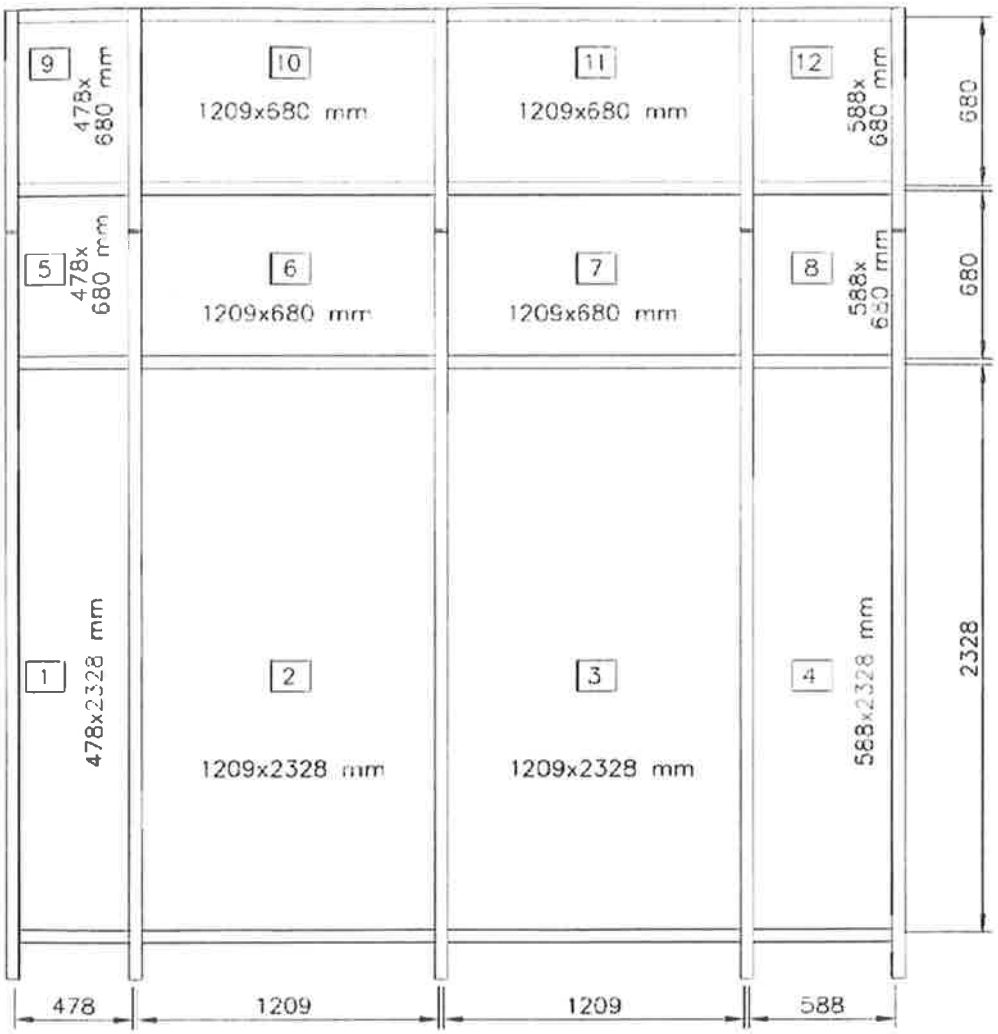

Double glazing:

Tempered glass 6mm–12 Argon–Pyrostop 30–26 (18mm)

sapa	Elegance 52 FR. Test with specimen exposed from the outside. Glass sizes.	ELEGANCE 52 FR		
		1:25	03-12-08	TE52-15.02

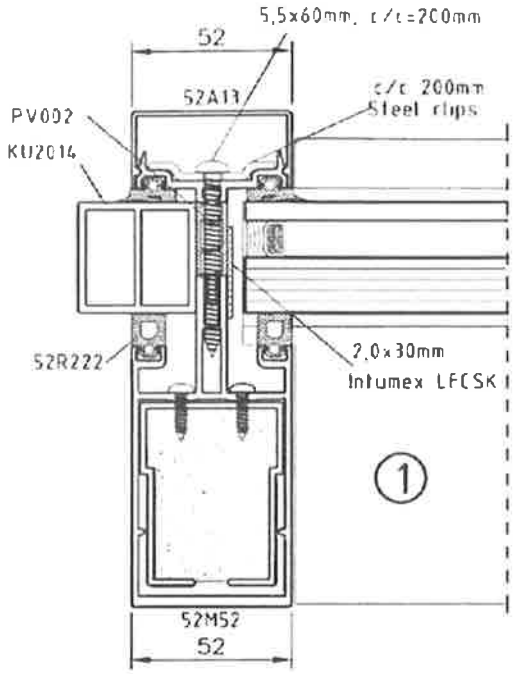

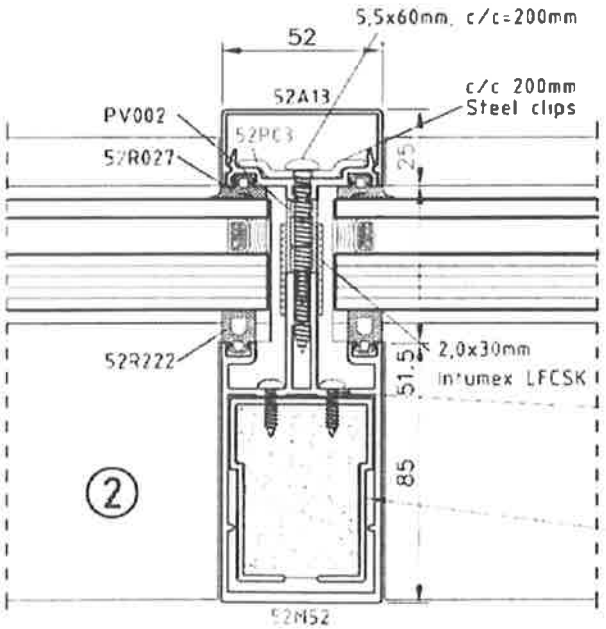

Screw 82K216, 6 pcs
3,5x16 mm
(location see drawing
TE52-15 13)

Reinforcement section
CU5008 with cooling
compound (gypsum with
additives)

sapa	Elegance 52 FR. Test with specimen exposed from the outside Detail 1 and 2.	ELEGANCE 52 FR		
		1:2	03-12-08	TE52-15.03

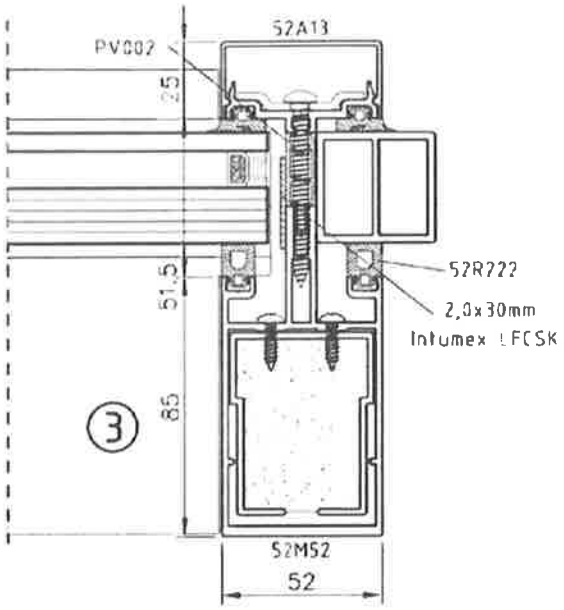

sapa	Elegance 52 FR Test with specimen exposed from the outside. Detail 3.	ELEGANCE 52 FR		
		1:2	03-12-08	TE52-15.04

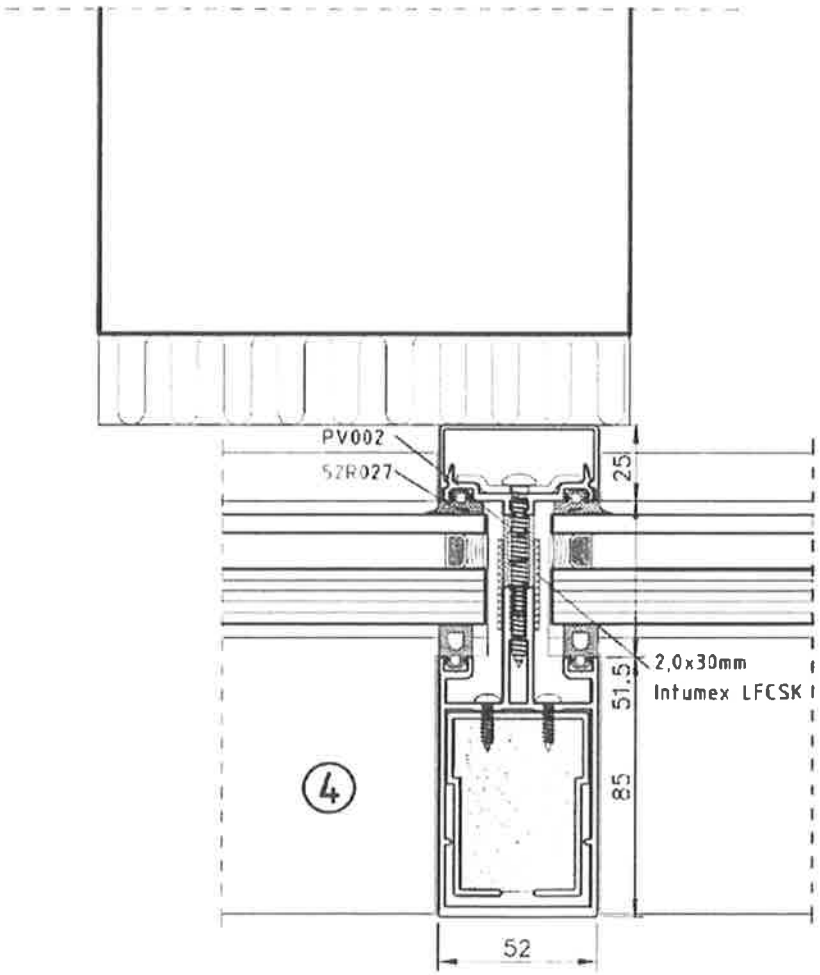

sapa	Elegance 52 FR Test with specimen exposed from the outside. Detail 4	ELEGANCE 52 FR		
		1:2	03-12-08	TE52-15.05

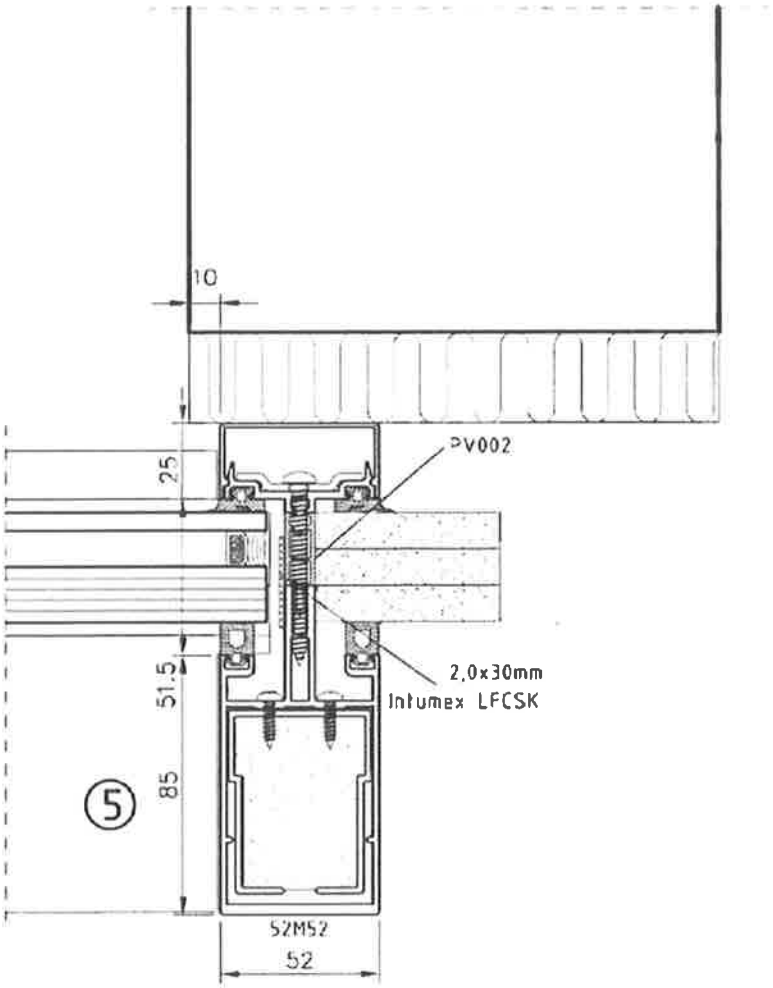

sapa	Elegance 52 FR Test with specimen exposed from the outside Detail 5	ELEGANCE 52 FR		
		1:2	03-12-08	TE52-15.06

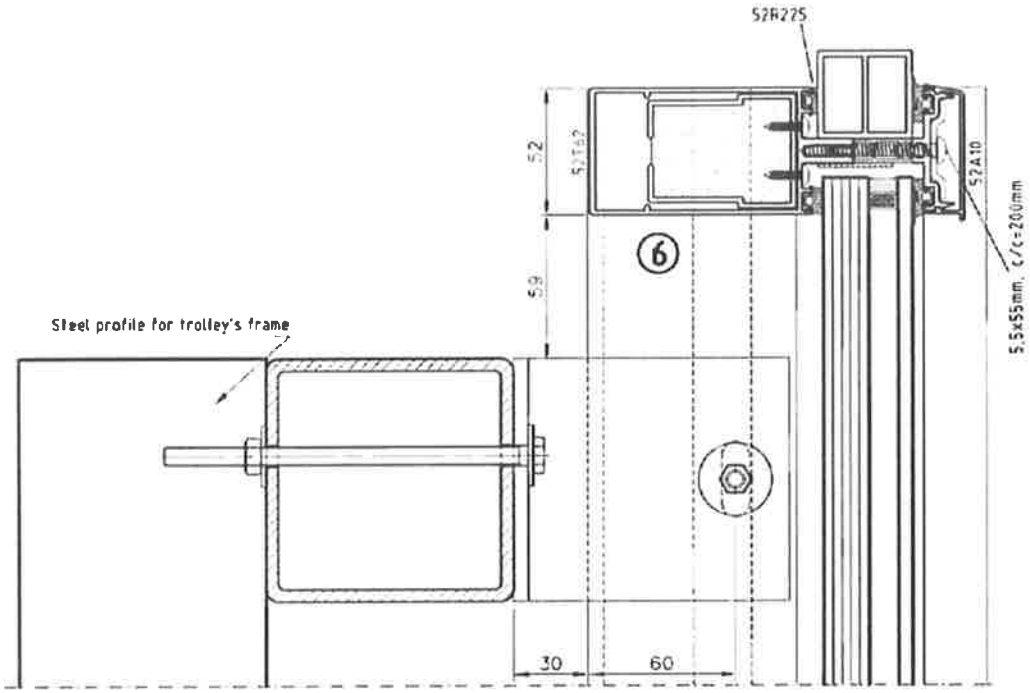

sapa	Elegance 52 FR. Test with specimen exposed from the outside. Detail 6	ELEGANCE 52 FR		
		1:2,5	03-12-08	TE52-15.07

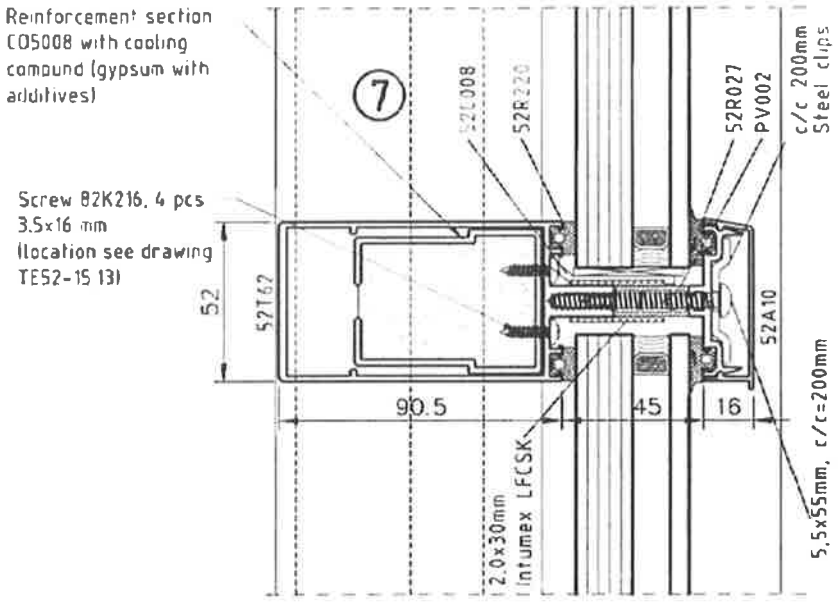

sapa	Elegance 52 FR Test with specimen exposed from the outside Detail 7	ELEGANCE 52 FR		
		1:2	03-12-08	TE52-15.08

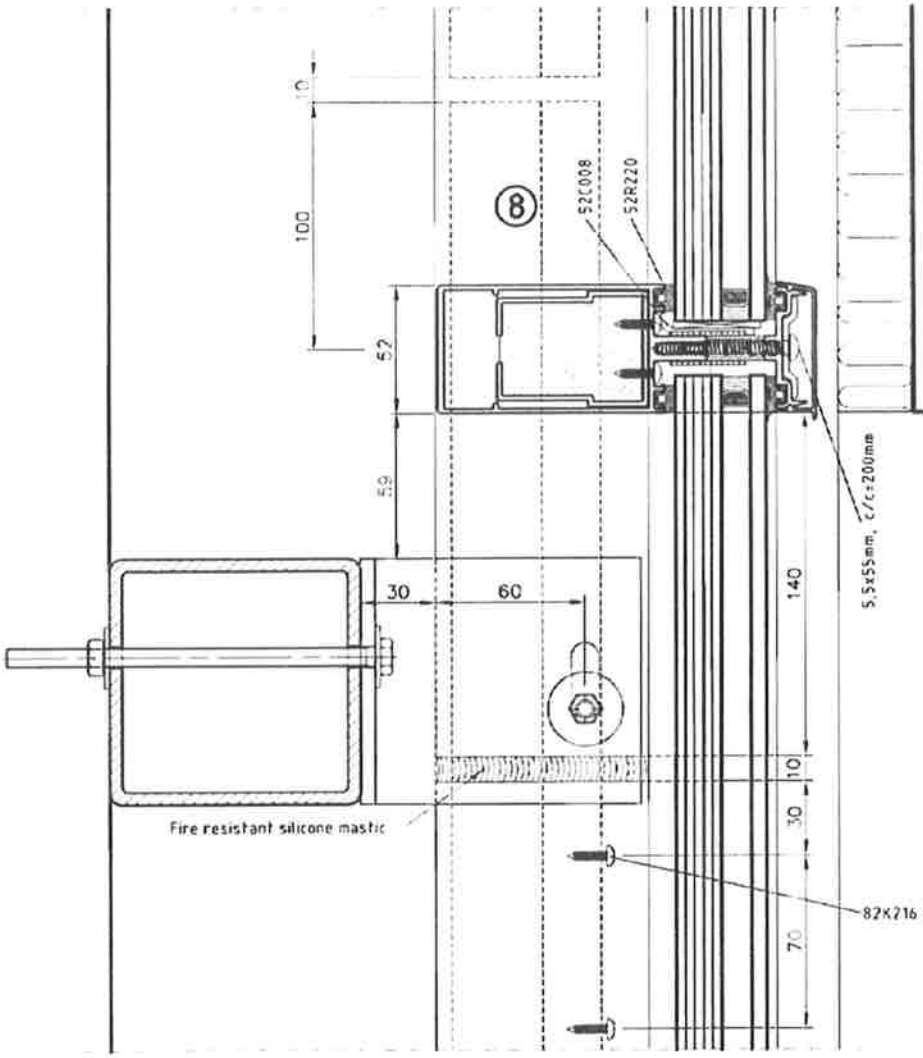

sapa	Elegance 52 FR. Test with specimen exposed from the outside. Detail 8.	ELEGANCE 52 FR		
		1:2,5	03-12-08	TE52-15.09

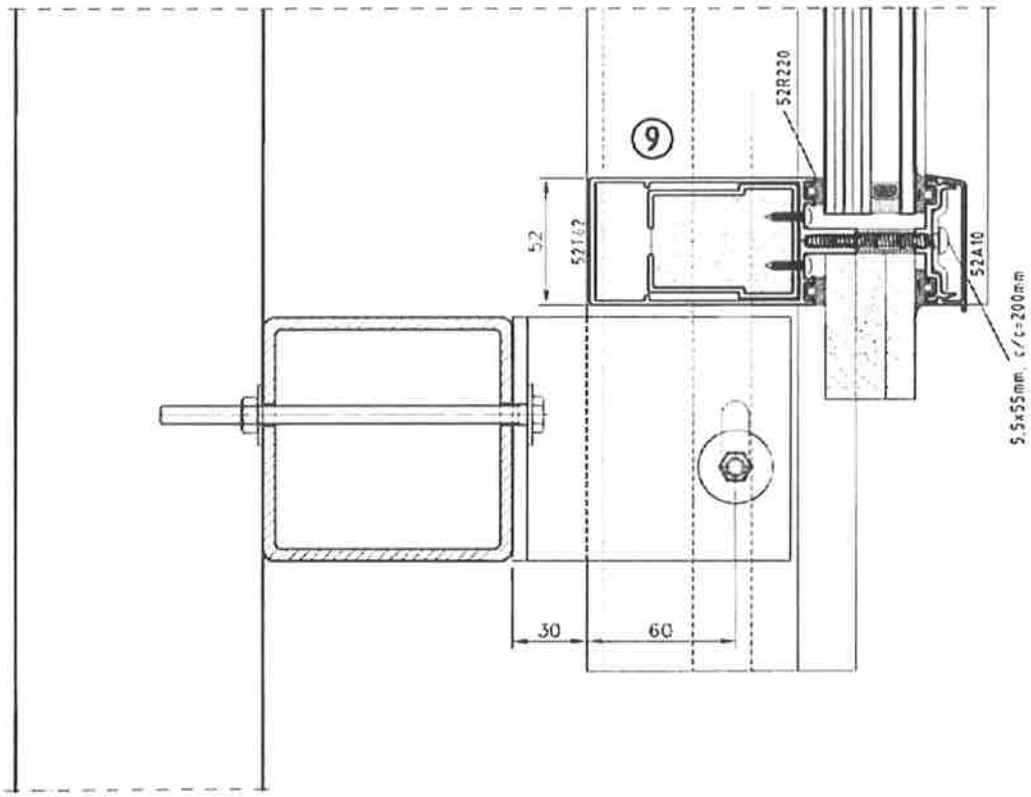

sapa	Elegance 52 FR Test with specimen exposed from the outside Detail 9	ELEGANCE 52 FR		
		1:2,5	03-12-08	TE52-15.10

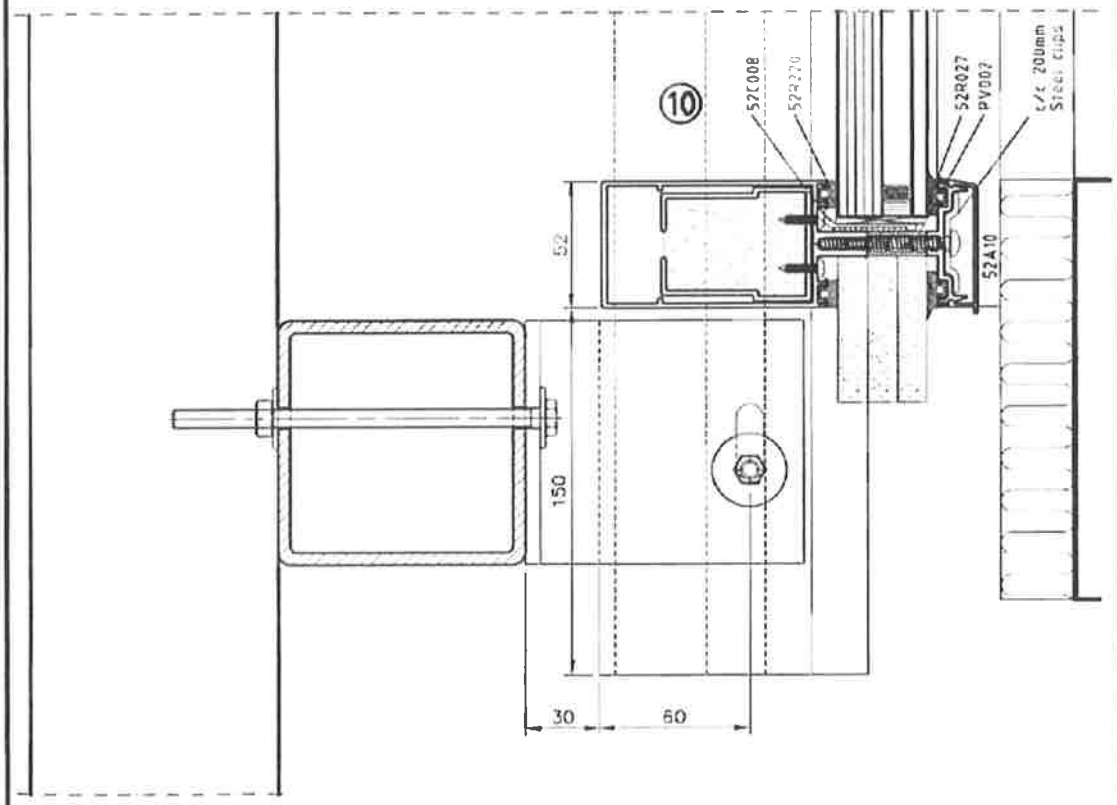

sapa	Elegance 52 FR Test with specimen exposed from the outside. Detail 10	ELEGANCE 52 FR		
		1:2,5	03-12-08	TE52-15.11

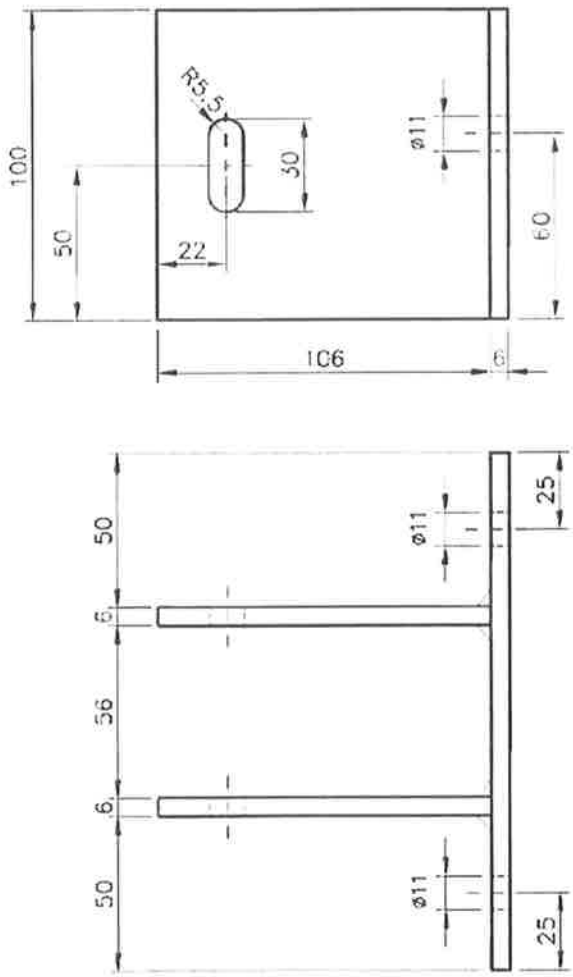

sapa	Elegance 52 FR. Test with specimen exposed from the outside. Anchor consoles.	ELEGANCE 52 FR		
		1:2	03-12-08	TE52-15.12

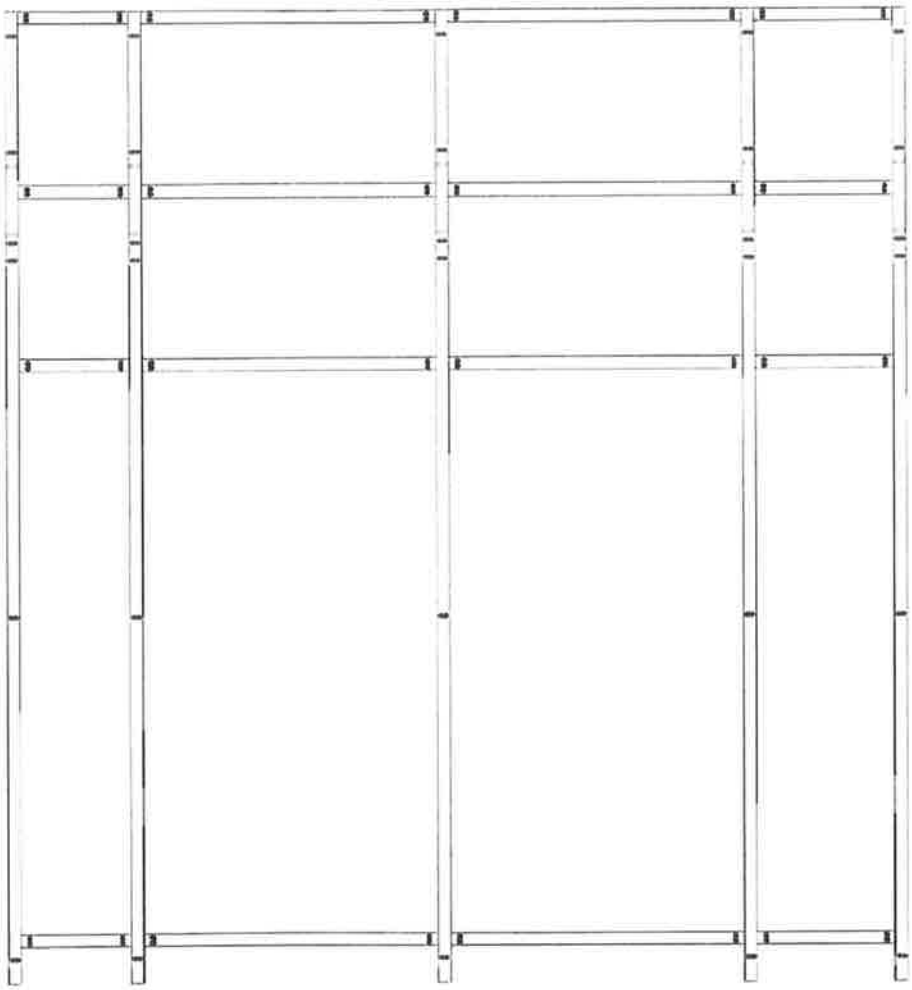

Location of screws 82K216 connecting main sections with reinforcement sections
(see detail 2 on drawing TE52–15.03, detail 7 on drawing TE52–15.08 and detail 8 on drawing TE52–15.09)

sapa	Elegance 52 FR Test with specimen exposed from the outside	ELEGANCE 52 FR		
		1:25	03-12-08	TE52-15.13

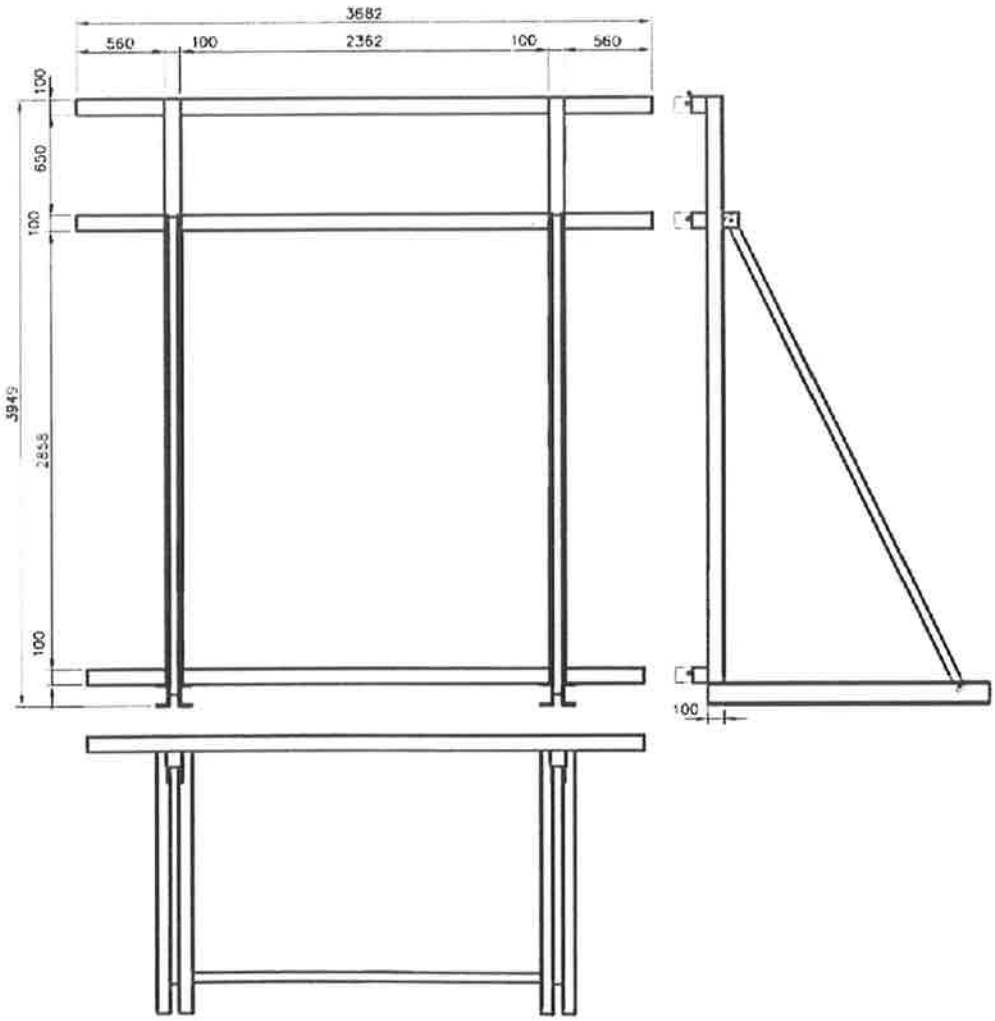

sapa	Elegance 52 FR. Test with specimen exposed from the outside. Structure of trolley's frame.	ELEGANCE 52 FR		
		1:40	03-12-09	TE52-15.14

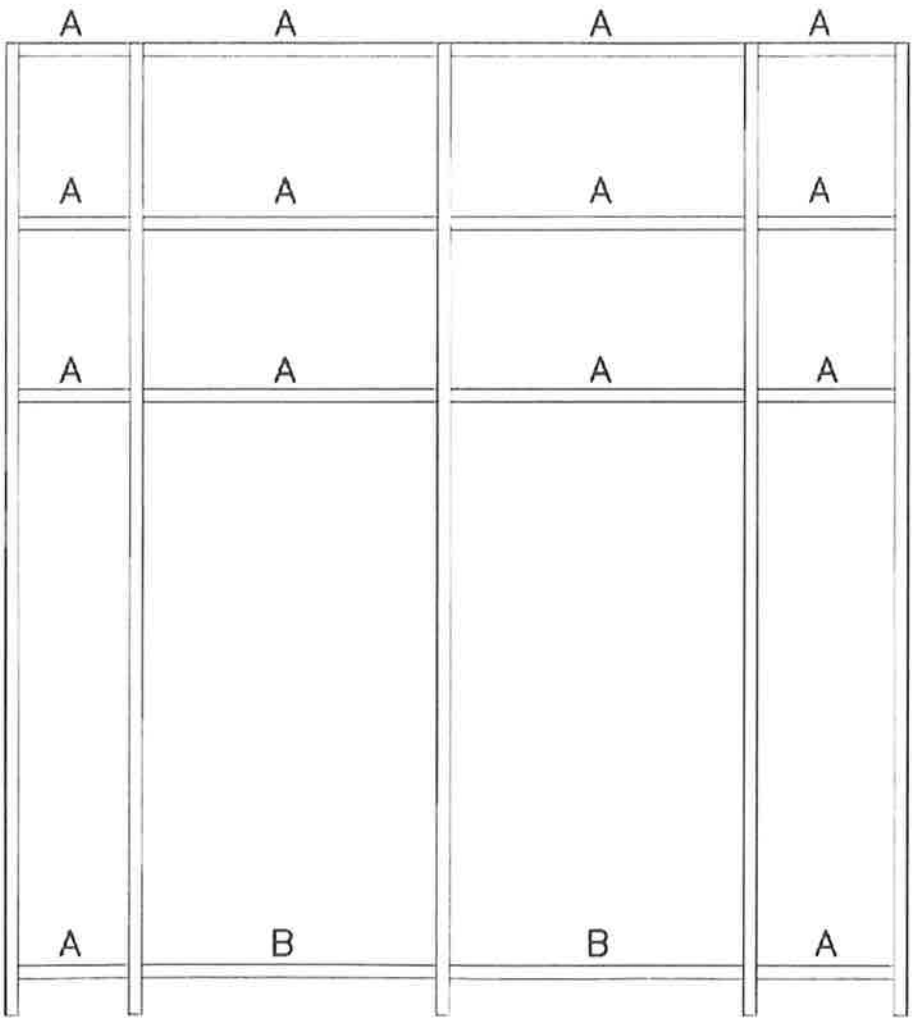

sapa	Elegance 52 FR. Test with specimen exposed from the outside. Corner joints types	ELEGANCE 52 FR		
		1:25	03-12-08	TE52-15.15

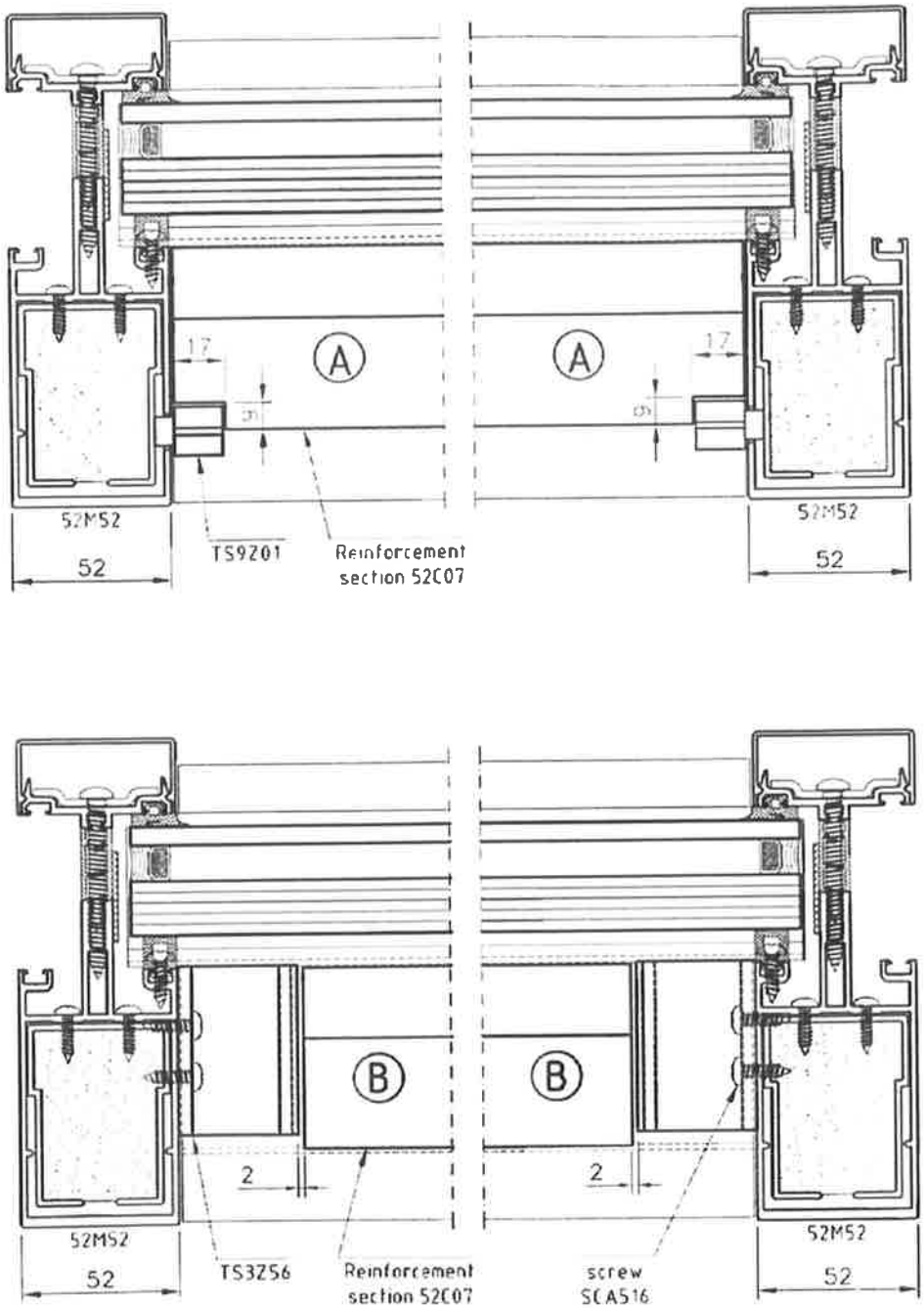

sapa	Elegance 52 FR, Test with specimen exposed from the outsice, Corner joints types	ELEGANCE 52 FR		
		1:2	03-12-08	TE52-15.16

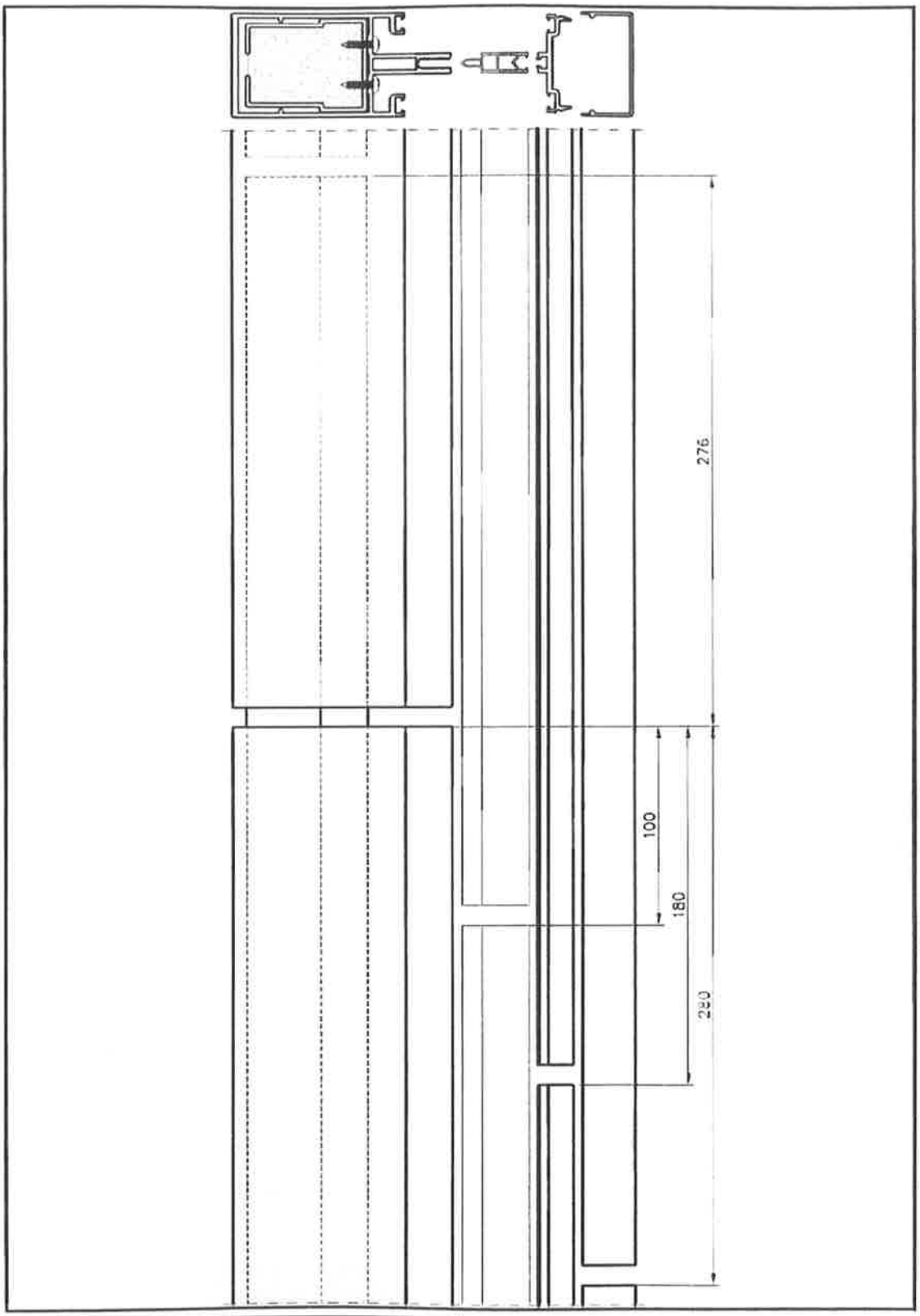

sapa	Elegance 52 FR. Test with specimen exposed from the outside. Expansion joint princ ple	ELEGANCE 52 FR		
		1:2,5	03-12-09	TE52-15.17

ANNEX 4 - TEST PHOTOGRAPHS

Exposed face before test

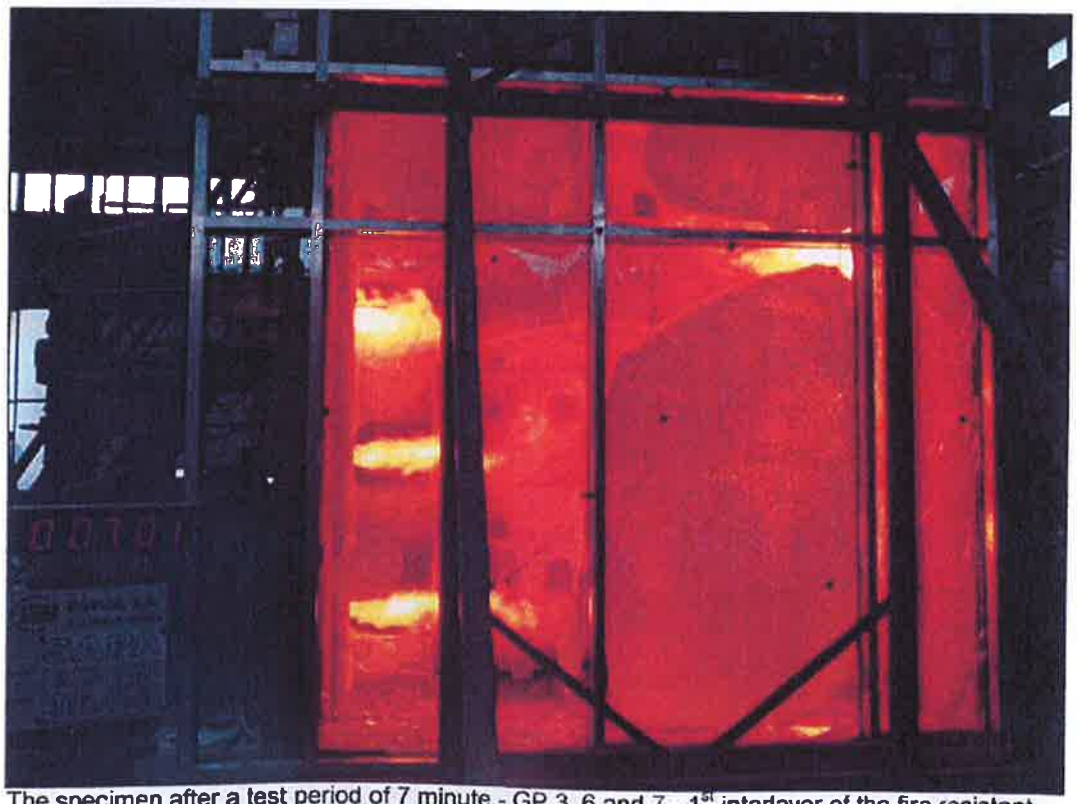

The specimen after a test period of 7 minute - GP 3, 6 and 7 - 1st interlayer of the fire resistant glass begun to react

The specimen after a test period of 30 minute - overview

The specimen after a test period of 45 minute - overview

The specimen in 62nd minute - overview before test ending

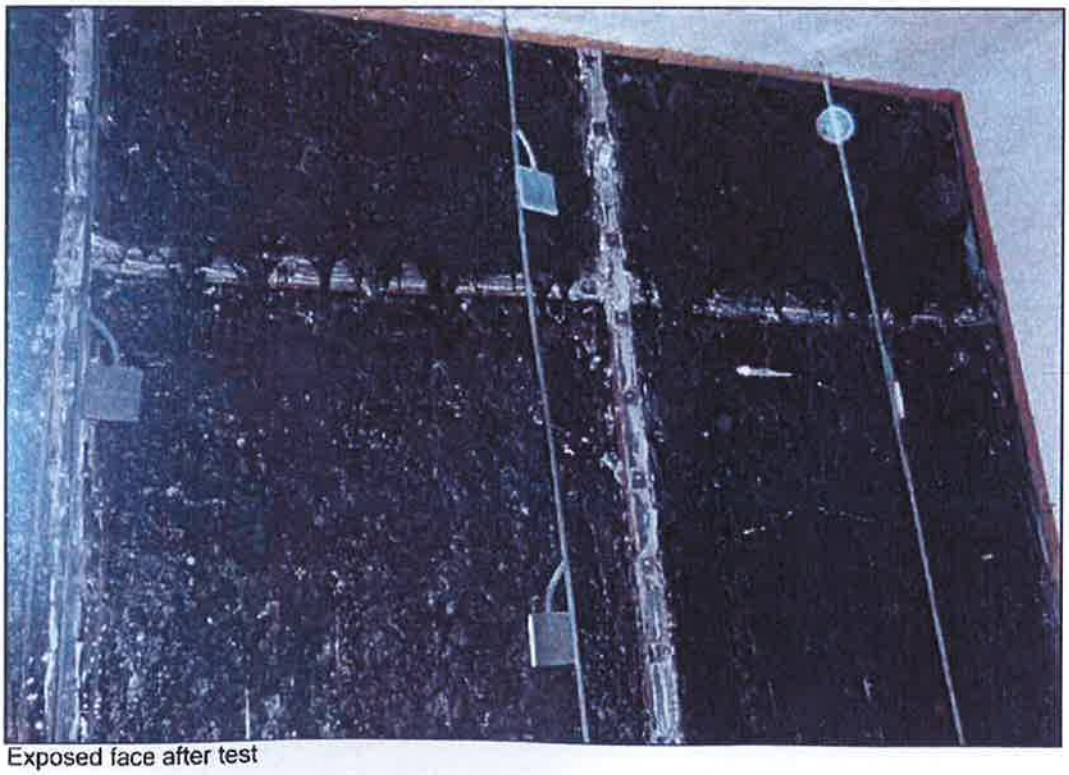

Exposed face after test